Power Board

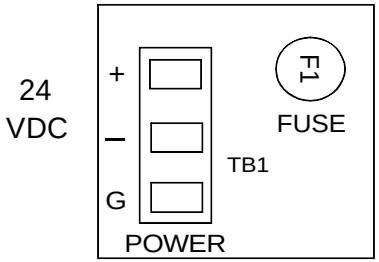

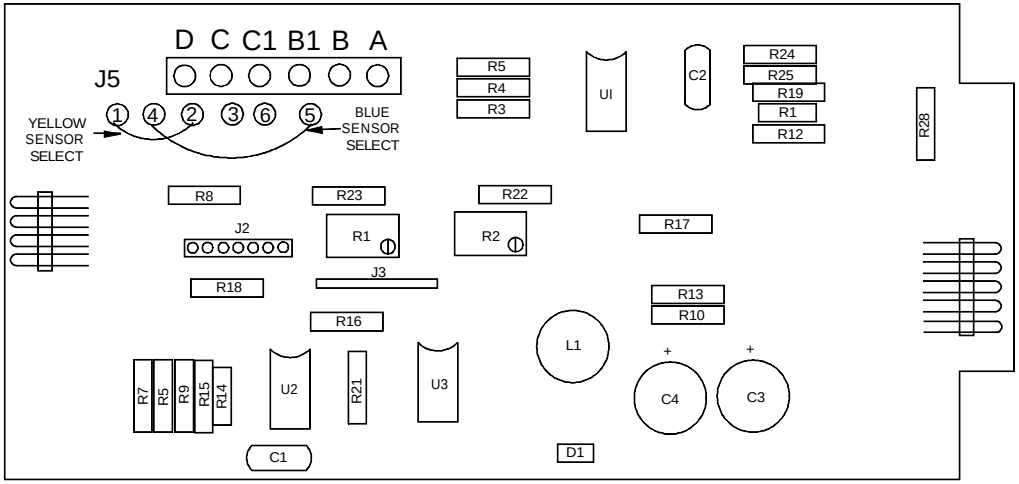

Signal Board

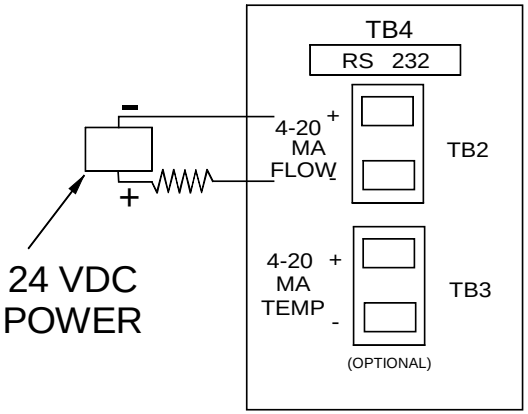

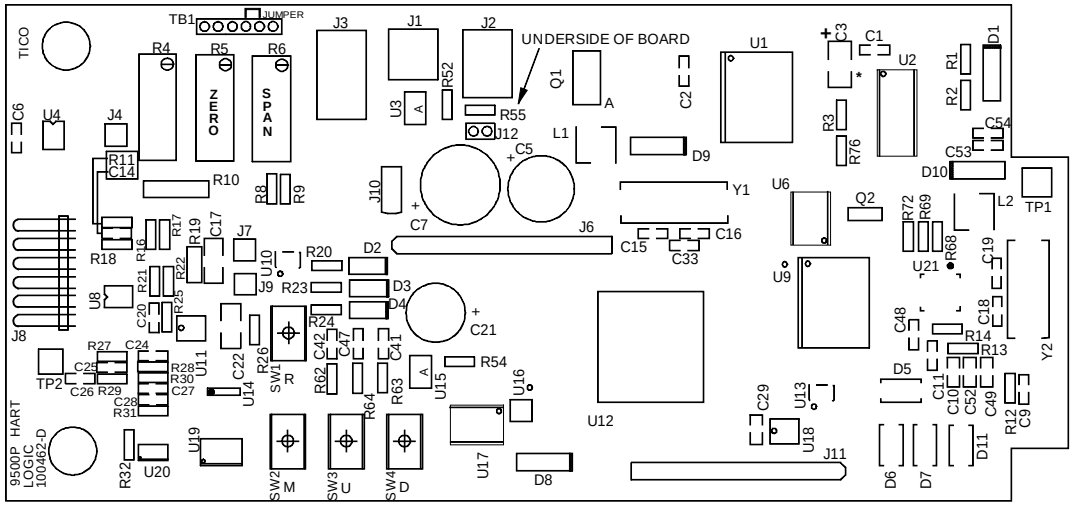

24 VDC POWER CAN BE PROVIDED EXTERNALLY (BY END USER) OR INTERNALLY BY THERMAL INSTRUMENT. SHOWN ABOVE AS EXTERNALLY POWERED.

SERIAL NO.	Thermal Instrument Company 217 Sterner Mill Road, Trevose, PA 19053, USA		
	DWG NO.: BOARD-9500P-24V-POWER AND SIGNAL-LOGIC HART 3-3-16	**DESCRIPTION:** INTEGRAL 9500PH TERMINAL BOARDS	
Thermal Instrument Company Proprietary Statement: This drawing is the property of Thermal Instrument Company. Unauthorized use of this document is prohibited and subject to prosecution if violated.	**ISSUED FOR RELEASE:** 3/3/16	**DRAWN BY:** MJH	**APPROVED BY:**
	SCALE: NONE	**MATERIAL:** AS NOTED	**PAGE:** 1 of 1